# BARNES ELEMENTARY SCHOOL
# ROOF REPLACEMENT

## SITE MAPS

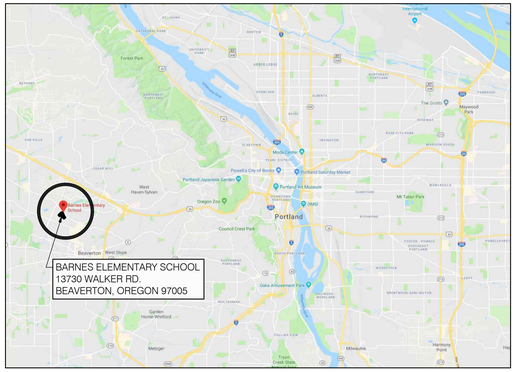


1 GI-1 LOCATION MAP
SCALE: NTS

2 GI-1 VICINITY MAP
SCALE: NTS

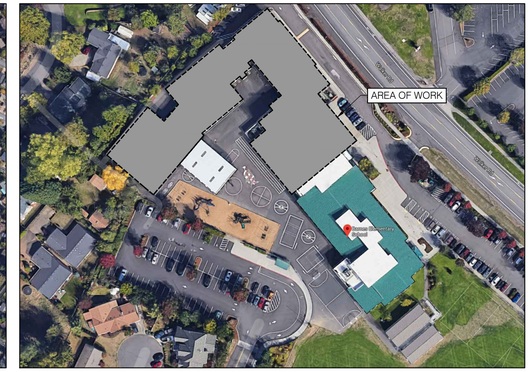


3 GI-1 CAMPUS PLAN
SCALE: NTS

## DRAWING SCHEDULE


| | |
|---|---|
| GI-1 | GENERAL INFORMATION |
| R100 | ROOF PLAN |
| R101 | PARTIAL ROOF PLAN AREAS A, B, C, D, E, F, G & H |
| R200 | DETAILS |
| R201 | DETAILS |
| R202 | DETAILS |
| S000 | GENERAL NOTES |
| S100 | PARTIAL ROOF PLAN |
| S201 | DETAILS |
| S202 | DETAILS |


## GENERAL NOTES

1. CONTRACTOR IS RESPONSIBLE FOR VERIFYING ALL DIMENSIONS AND CONDITIONS OF THE PROJECT, INCLUDING VERIFICATION OF EXISTING ROOF SYSTEM CONSTRUCTION AND MATERIALS.
2. CONTRACTOR STAGING AND STORAGE AREAS SHALL BE AS DIRECTED BY THE OWNER'S REPRESENTATIVE AT THE PRE-CONSTRUCTION MEETING. CONTRACTOR SHALL ASSUME A REASONABLE AMOUNT OF STORAGE AND STAGING SPACE WILL BE MADE AVAILABLE.
3. CONTRACTOR SHALL BE RESPONSIBLE FOR PROTECTING BUILDING SURFACES, FINISHES, AND SYSTEMS FROM DAMAGE, DISCOLORATION, ETC. DURING THE COURSE OF ALL CONSTRUCTION ACTIVITIES.
4. PERSONAL FALL PROTECTION DEVICES ARE NOT, NOR WILL BE, PROVIDED BY THE OWNER ON ANY ROOF AREA DESIGNATED TO RECEIVE WORK. PERSONAL FALL PROTECTION IS THE RESPONSIBILITY OF THE CONTRACTOR.
5. EXISTING MATERIALS AND CONSTRUCTION ARE NOTED ON THE DRAWINGS AS EXISTING OR EXIST. ALL OTHER NOTATIONS INDICATE NEW MATERIALS, PRODUCTS, AND CONSTRUCTION UNLESS OTHERWISE STATED OR INDICATED.
6. ALL CONSTRUCTION SHALL CONFORM TO THE 2019 OREGON STRUCTURAL SPECIALTY CODE, AND ALL LOCAL GOVERNING BUILDING CODES AND ORDINANCES.
7. IT SHALL BE THE RESPONSIBILITY OF THE CONTRACTOR TO LOCATE ALL EXISTING UTILITIES WHETHER SHOWN HEREIN OR NOT, AND TO PROTECT UTILITIES FROM DAMAGE. THE CONTRACTOR SHALL BEAR ALL EXPENSES OF REPAIR OR REPLACEMENT OF UTILITIES OR OTHER PROPERTY DAMAGED BY OPERATIONS IN CONJUNCTION WITH THE EXECUTION OF THE WORK.
8. THIS PROJECT IS FOR A BASE BID FOR A SCOPE OF WORK THAT INCLUDES, BUT IS NOT LIMITED TO, THE REMOVAL OF EXISTING BUILT-UP ROOF ASSEMBLIES AT ROOF AREAS A-H, AND REPLACEMENT WITH A 90-MIL FULLY ADHERED ELASTIC SHEET MEMBRANE (EPDM) OVER RIGID INSULATION AND COVER BOARD, WITH RELATED SHEET METAL FLASHINGS, AND EXTERIOR HANGING GUTTERS, DOWNSPOUTS, ROOF ACCESS LADDERS AND FALL PROTECTION ANCHORS. WORK DOES NOT INCLUDE ANY INCREASE IN AREA OR CHANGES IN OCCUPANCY.
9. SCOPE OF WORK CONSISTS OF THIS DRAWING SET AND SPECIFICATION SECTIONS IN THE PROJECT MANUAL.
10. IT IS THE RESPONSIBILITY OF THE CONTRACTOR TO PROTECT BUILDING OCCUPANTS AND PASSERS-BY FROM FALLING DEBRIS OR EQUIPMENT. DO NOT THROW MATERIALS FROM THE ROOF.
11. ROOF ACCESS BY MEANS OF EXTERNAL LIFT OR OTHER DEVICE.

## ROOF SYSTEM ASSEMBLIES

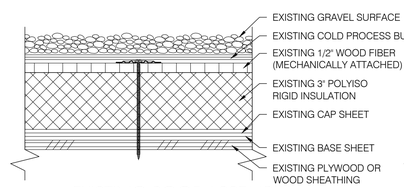


4 GI-1 EXISTING ROOF ASSEMBLY
ROOF AREAS A, B, C, D, E & G
SCALE: 3" = 1'-0"

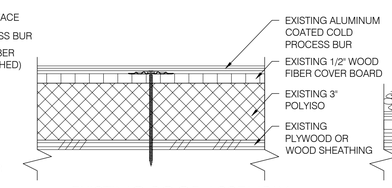


5 GI-1 EXISTING ROOF ASSEMBLY
ROOF AREA F
SCALE: 3" = 1'-0"

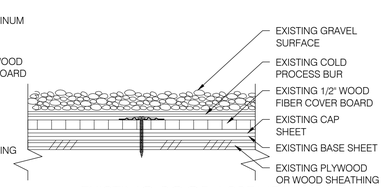


6 GI-1 EXISTING ROOF ASSEMBLY
ROOF AREA H
SCALE: 3" = 1'-0"

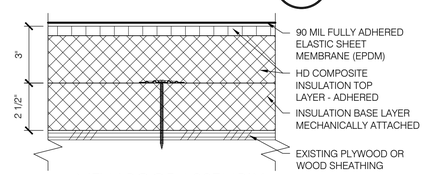


7 GI-1 NEW ROOF ASSEMBLY
ROOF AREAS A, B, C, D, E, F & G
SCALE: 3" = 1'-0"

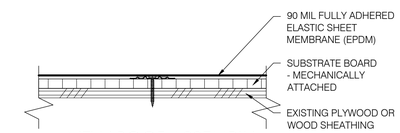


8 GI-1 NEW ROOF ASSEMBLY
ROOF AREAS H
SCALE: 3" = 1'-0"

## DRAWING SYMBOLS

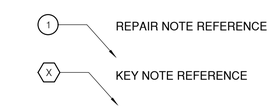


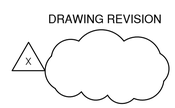


DETAIL REFERENCE ON PLAN DRAWINGS - SIM. INDICATES SIMILAR CONSTRUCTION AS SHOWN ON DETAIL NOTED.

## PROJECT TEAM

### OWNER

Beaverton School District
16550 SW Merlo Rd.
Beaverton, Oregon 97006
tel: (503) 356-4587
Contact: Michael Lamberty CPM

BEAVERTON SCHOOL DISTRICT
THRIVE • CONTRIBUTE • EXCEL

### STRUCTURAL ENGINEER

TM Rippey Consulting Engineers
7650 SW Beveland St
Tigard Oregon 97223
tel: (503) 443-3900
fax: (503) 443-3700
Contact: Ralph Turnbaugh, P.E.

TMR
T.M. RIPPEY
CONSULTING ENGINEERS

### ROOF CONSULTANT

Professional Roof Consultants, Inc.
1108 SE Grand Ave., Suite 300
Portland, Oregon 97214
tel: (503) 280-8759
Contact: Jose Ponce, RRO, RRC

PROFESSIONAL ROOF CONSULTANTS INC

BID SET


PROFESSIONAL ROOF CONSULTANTS INC
1108 SE GRAND AVENUE, SUITE 300
PORTLAND, OREGON 97214
PH. 503 280 8759 FAX: 503 280 8866


BEAVERTON SCHOOL DISTRICT
BARNES ELEMENTARY SCHOOL
ROOF REPLACEMENT

SHEET TITLE:
GENERAL INFORMATION


THESE DRAWINGS ARE THE PROPERTY OF PROFESSIONAL ROOF CONSULTANTS, INC. AND ARE NOT TO BE USED OR REPRODUCED WITHOUT WRITTEN PERMISSION OF PROFESSIONAL ROOF CONSULTANTS, INC.


THE BAR SCALE IS 2-INCHES IN LENGTH. IF THE BAR IS NOT 2-INCHES LONG, THIS DRAWING IS NOT TO THE SCALE INDICATED.

| | |
|---|---|
| Date: | FEB 11, 2020 |
| Revisions: | |
| Drawn: | C.G. |
| Check: | J.F.P. |
| File: | GI-Gen_Info |
| Job: | R3055.20 |

SHEET NUMBER:
GI-1


© Copyright Professional Roof Consultants, Inc. 2019

## LEGEND

X / Rxx — REFERENCE ENLARGED ROOF PLANS FOR SCOPE AND DETAIL REFERENCE

SHADED AREAS INDICATE ROOF AREAS SCHEDULED FOR REPLACEMENT - ALL OTHER ROOF AREAS N.I.C. (PROTECT FROM DAMAGE)

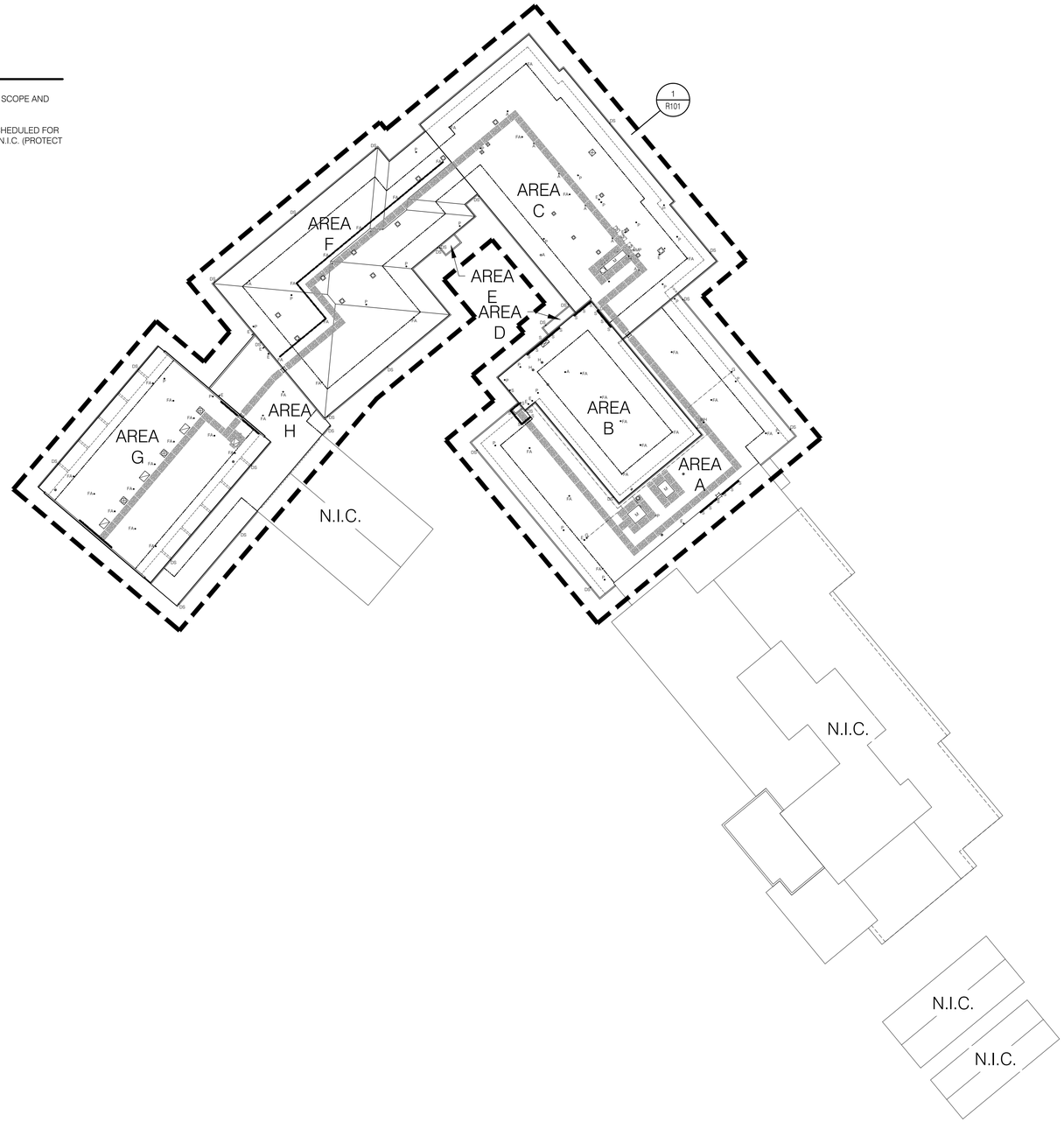


1 / R100 OVERALL ROOF PLAN
SCALE: 1/32" = 1'-0"

N

BID SET

PROFESSIONAL ROOF CONSULTANTS INC
1108 SE GRAND AVENUE, SUITE 300
PORTLAND, OREGON 97214
PH. 503 280 8759 FAX: 503 280 8866

# BEAVERTON SCHOOL DISTRICT
# BARNES ELEMENTARY SCHOOL
# ROOF REPLACEMENT

SHEET TITLE:
OVERALL ROOF PLAN

THESE DRAWINGS ARE THE PROPERTY OF PROFESSIONAL ROOF CONSULTANTS, INC. AND ARE NOT TO BE USED OR REPRODUCED WITHOUT WRITTEN PERMISSION OF PROFESSIONAL ROOF CONSULTANTS, INC.

THE BAR SCALE IS 2INCHES IN LENGTH. IF THE BAR IS NOT 2INCHES LONG, THIS DRAWING IS NOT TO THE SCALE INDICATED.

| | |
|---|---|
| Date: | FEB 11, 2020 |
| Revisions: | |
| Drawn: | C.G. |
| Check: | J.F.P. |
| File: | R100-Roof_Plans |
| Job: | R3055.20 |

SHEET NUMBER:
R100

© Copyright Professional Roof Consultants, Inc. 2019

## KEY NOTES

1. DEMO EXISTING FALL PROTECTION SYSTEM AND REPLACE WITH NEW IN ACCORDANCE WITH STRUCTURAL.
2. INSTALL BACKER ROD AND SEALANT BETWEEN EXISTING CEMENT PLASTER CLADDING AND EMBEDDED DOWNSPOUT TYPICAL AT ALL EXISTING DOWNSPOUTS SERVICING ROOF AREA F.
3. REMOVE AND RELOCATE ELECTRICAL PENETRATION AS NEEDED TO ALLOW FOR INSTALLATION OF ROOF BASE FLASHING.
4. REPLACE EXISTING VENTS WITH NEW CURB MOUNTED MATCHING VENTS (FIELD VERIFY SIZE).
5. RE-LOCATE EXISTING PLUMBING VENT A MINIMUM OF 24-INCHES AWAY FROM NEW ROOF HATCH CURB.
6. PROVIDE SEALANT REPAIR AT EXISTING CRACK IN EXISTING CEMENT PLASTER WALL - PREP SURFACES.
7. REMOVE AND REPLACE ROOF ASSEMBLY AT LOCATION OF NEW GUARDRAIL PIPE PENETRATION. PROVIDE PRE-MANUFACTURED PIPE FLASHING BOOT COMPATIBLE WITH EXISTING SINGLE PLY ROOF SYSTEM. SEAL PIPE FLASHING WITH STAINLESS STEEL CLAMPING BAND AND SEALANT AND COUNTERFLASH WITH STAINLESS STEEL STORM COLLAR FLASHING. STORM COLLAR BASIS OF DESIGN: SBC INDUSTRIES MODEL UMB-BELL.

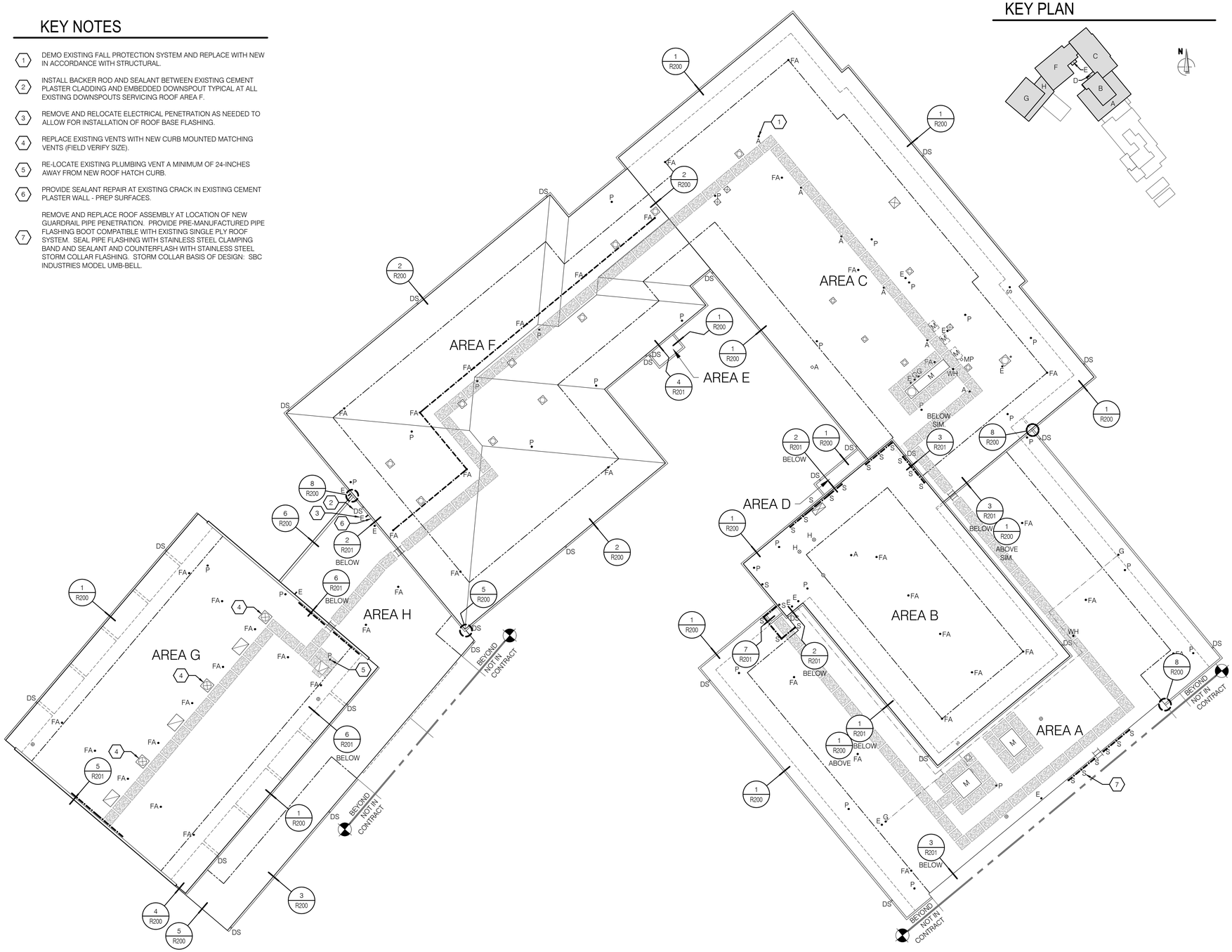


1 / R101 PARTIAL ROOF PLAN AREAS A, B, C, D, E, F, G & H
SCALE: 1/16" = 1'-0"

## KEY PLAN




## LEGEND

| | | |
|---|---|---|
| 3 / R202 | P• | VENT PIPE PENETRATION- RAISE HEIGHT TO ACCOMMODATE NEW ROOF ASSEMBLY MINIMUM FLASHING HEIGHT. |
| 4 / R202 | E E• | EXISTING ELECTRICAL PENETRATION - RAISE HEIGHT / RELOCATE AS NECESSARY TO ACCOMMODATE NEW ROOF ASSEMBLY MINIMUM FLASHING HEIGHT. |
| 4 / R202 | WH• | EXISTING WEATHER HEAD |
| 4 / R202 | G• | EXISTING GAS PENETRATION - RAISE HEIGHT AS NECESSARY TO ACCOMMODATE NEW ROOF ASSEMBLY MINIMUM FLASHING HEIGHT. |
| 7 / R200 | FA• | FALL PROTECTION ANCHOR - PER STRUCTURAL |
| | A• | ABANDONED PENETRATION - DEMO |
| 8 / R202 | MP ▫ | MULTI-PIPE PENETRATION |
| | A ▫ | ABANDONED MULTI-PIPE PENETRATION - DEMO AND INFILL OPENING IN DECK. |
| | DS | EXISTING DOWNSPOUT TO REMAIN - INTEGRATE WITH NEW GUTTER AT AREA F. |
| | R R | EXISTING FALL RESTRAINT RAILING - DEMO |
| 7 / R200 | S S | FALL RESTRAINT RAILING - PER STRUCTURAL |
| | | EXISTING CONDUIT OVER ROOF - EXTEND HEIGHT TO ACCOMMODATE NEW ROOF ASSEMBLY AND PLACE ON NON PENETRATING PIPE SUPPORTS PER 077200 - ROOF ACCESSORIES |
| | | PERIMETER WARNING LINE |
| | | HORIZONTAL LIFE LINE |
| | | BUILDING WALL BELOW |
| | | EXISTING ROOF ACCESS LADDER |
| | | ROOF ACCESS LADDER - PER STRUCTURAL |
| 6 / R202 | | CURBED SKYLIGHT - REMOVE AND REPLACE EXISTING PER 086200 - UNIT SKYLIGHTS |
| 1 / R202 | | EXISTING CURBED VENT - RAISE HEIGHT TO ACCOMMODATE NEW ROOF ASSEMBLY MINIMUM FLASHING HEIGHT |
| 1 / R202 | | EXISTING CURBED FAN UNIT - RAISE HEIGHT TO ACCOMMODATE NEW ROOF ASSEMBLY MINIMUM FLASHING HEIGHT |
| 1 / R202 | | CURBED VENT - REPLACE EXISTING WITH NEW OF MATCHING SIZE PER 077200 - ROOF ACCESSORIES |
| 2 / R202 | H | EXISTING FLANGED PENETRATION (HOT) - RAISE HEIGHT TO ACCOMMODATE NEW ROOF ASSEMBLY |
| 2 / R202 | | EXISTING FLANGED VENT - RAISE HEIGHT TO ACCOMMODATE NEW ROOF ASSEMBLY |
| 5 / R202 | M | EXISTING CURBED MECHANICAL UNIT - RAISE HEIGHT TO ACCOMMODATE NEW ROOF ASSEMBLY MINIMUM FLASHING HEIGHT |
| | M | EXISTING MECHANICAL - PLACE ONTO NEW EQUIPMENT SUPPORT STANDS PER 077200 - ROOF ACCESSORIES |
| | | WALK PADS |
| 7 / R202 | | CURBED ROOF ACCESS HATCH WITH LADDER UP SAFETY POST AND NON-PENETRATING GUARDRAIL PER 077200 ROOF ACCESSORIES |

## GENERAL NOTES

1. ALL ITEMS TRANSPORTED TO ROOF SHALL BE TRANSPORTED USING APPROVED AND SAFE METHODS OF LOADING.
2. CONTRACTOR SHALL EMPLOY MEANS OF PROTECTING BUILDING OCCUPANTS AND GENERAL PUBLIC AT ALL TIMES DURING THE COURSE OF CONSTRUCTION.
3. PROTECT ADJACENT DECKS, VEGETATION, FURNITURE, AND OTHER PROPERTY DURING DEMOLITION ACTIVITIES.
4. ALL PERMITTING, INCLUDING ROAD CLOSURES, PARKING STALLS, SIDEWALK CLOSURES, SCAFFOLD ERECTION, ETC. SHALL BE COORDINATED, OBTAINED, AND PAID FOR BY CONTRACTOR.
5. CONTRACTOR IS RESPONSIBLE FOR RAISING UNITS ONTO NEW OR EXTENDED CURBS AND ANY RELATED STRUCTURAL ENGINEERING. COORDINATE WORK ASSOCIATED WITH RAISING OF ROOF TOP MECHANICAL UNITS AND PENETRATIONS WITH MECHANICAL CONTRACTOR HIRED BY THE DISTRICT UNDER SEPARATE CONTRACT. MECHANICAL SHUT DOWN, DISCONNECT, RE-CONNECT, RE-WIRING, CONTROLS WORK, ETC. TO BE PERFORMED BY OTHERS. MAINTAIN WATERTIGHT CONDITIONS DURING PERFORMANCE OF WORK.

BID SET


PROFESSIONAL ROOF CONSULTANTS INC
1108 SE GRAND AVENUE, SUITE 300
PORTLAND, OREGON 97214
PH. 503 280 8759 FAX: 503 280 8866


BEAVERTON SCHOOL DISTRICT

BARNES ELEMENTARY SCHOOL

ROOF REPLACEMENT

SHEET TITLE:

PARTIAL ROOF PLAN AREAS A, B, C, D, E, F, G & H


THESE DRAWINGS ARE THE PROPERTY OF PROFESSIONAL ROOF CONSULTANTS, INC. AND ARE NOT TO BE USED OR REPRODUCED WITHOUT WRITTEN PERMISSION OF PROFESSIONAL ROOF CONSULTANTS, INC.


THE BAR SCALE IS 2-INCHES IN LENGTH. IF THE BAR IS NOT 2-INCHES LONG, THIS DRAWING IS NOT TO THE SCALE INDICATED.

| | |
|---|---|
| Date: | FEB 11, 2020 |
| Revisions: | |
| Drawn: | C.G. |
| Check: | J.F.P. |
| File: | R100-Roof_Plans |
| Job: | R3055.20 |

SHEET NUMBER:

R101


© Copyright Professional Roof Consultants, Inc. 2019

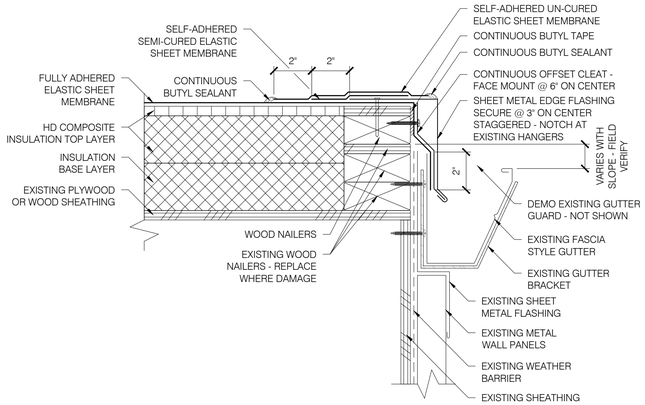


1 R200 GUTTER EDGE
SCALE: 3" = 1'-0"

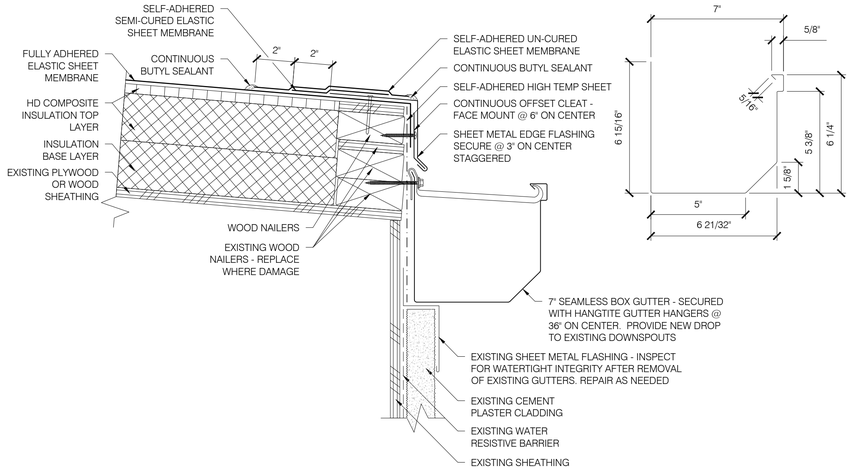


2 R200 GUTTER EDGE
SCALE: 3" = 1'-0"

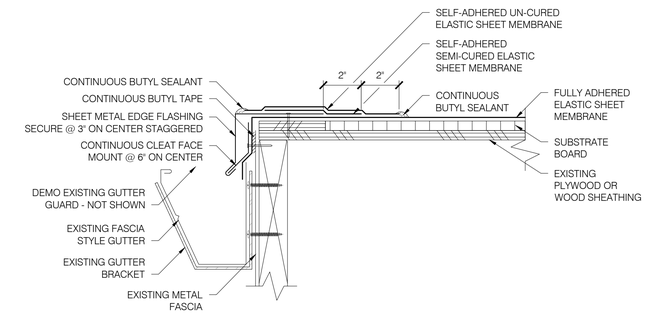


3 R200 GUTTER EDGE
SCALE: 3" = 1'-0"

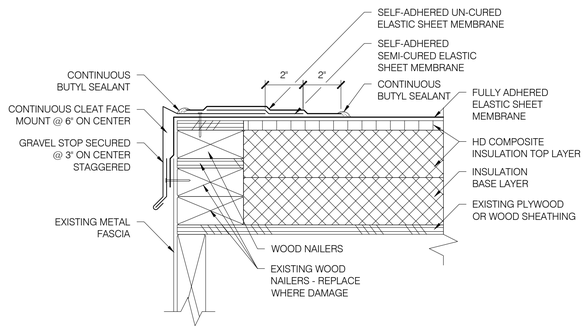


4 R200 RAKE EDGE
SCALE: 3" = 1'-0"

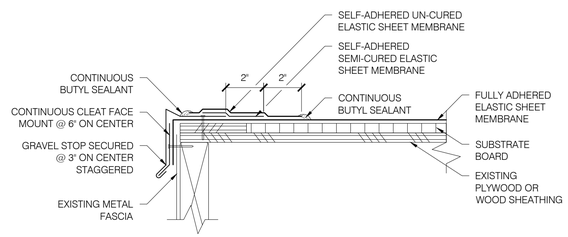


5 R200 RAKE EDGE
SCALE: 3" = 1'-0"

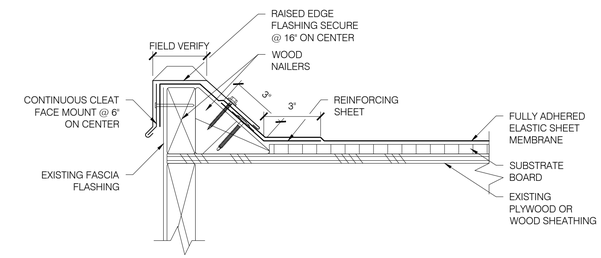


6 R200 RAKE EDGE
SCALE: 3" = 1'-0"

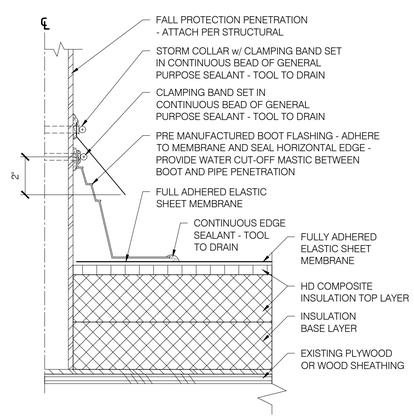


7 R200 STRUCTURAL PENETRATION
SCALE: 3" = 1'-0"

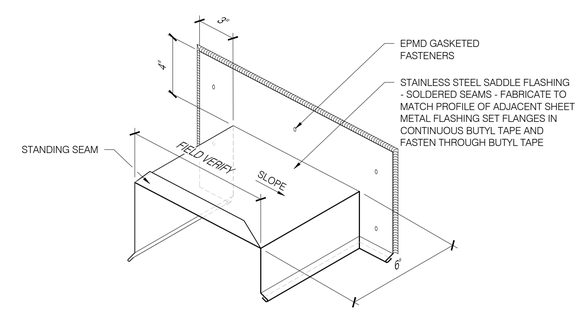


8 R200 END WALL SADDLE FLASHING
SCALE: NOT TO SCALE

BID SET

PROFESSIONAL ROOF CONSULTANTS INC
1108 SE GRAND AVENUE, SUITE 300
PORTLAND, OREGON 97214
PH. 503 280 8759 FAX: 503 280 8866

BEAVERTON SCHOOL DISTRICT
BARNES ELEMENTARY SCHOOL
ROOF REPLACEMENT

SHEET TITLE:
DETAILS

THESE DRAWINGS ARE THE PROPERTY OF PROFESSIONAL ROOF CONSULTANTS, INC. AND ARE NOT TO BE USED OR REPRODUCED WITHOUT WRITTEN PERMISSION OF PROFESSIONAL ROOF CONSULTANTS, INC.

THE BAR SCALE IS 2-INCHES IN LENGTH. IF THE BAR IS NOT 2-INCHES LONG, THIS DRAWING IS NOT TO THE SCALE INDICATED.

| | |
|---|---|
| Date: | FEB 11, 2020 |
| Revisions: | |
| Drawn: | C.G. |
| Check: | J.F.P. |
| File: | R200-Details |
| Job: | R3055.20 |

SHEET NUMBER:
R200

© Copyright Professional Roof Consultants, Inc. 2019

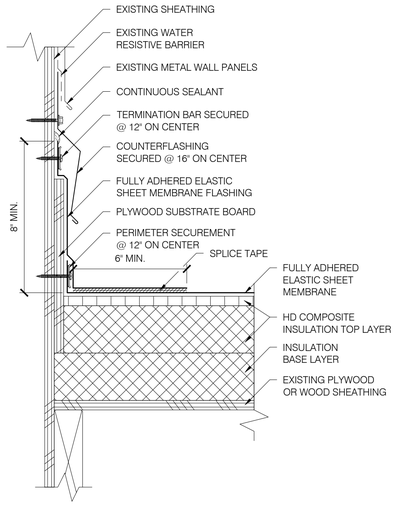


1 R201 HIGH WALL
SCALE: 3" = 1'-0"

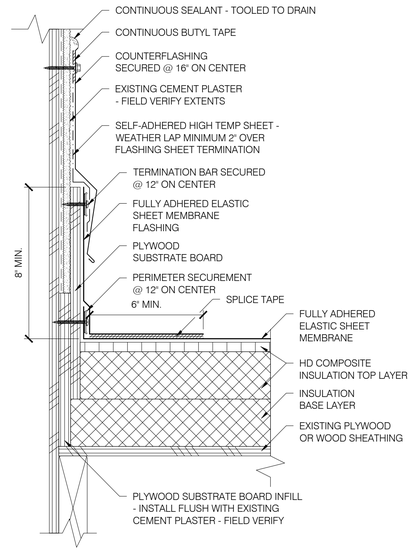


2 R201 HIGH WALL
SCALE: 3" = 1'-0"

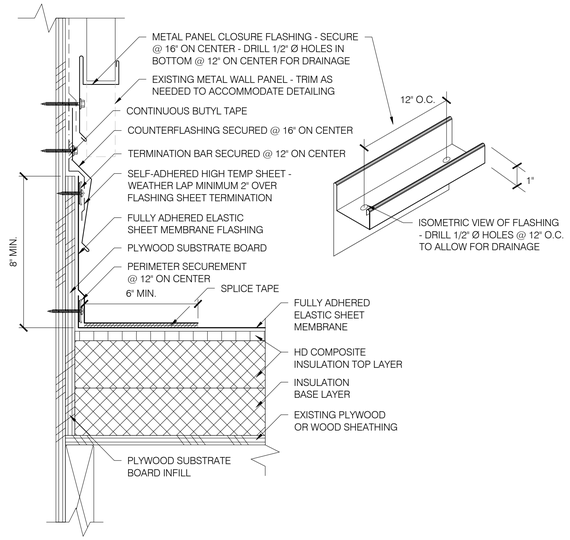


3 R201 HIGH WALL
SCALE: 3" = 1'-0"

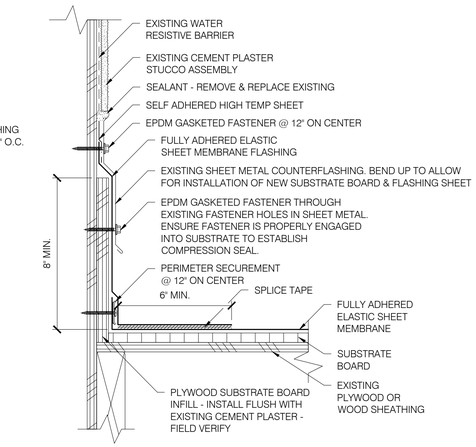


4 R201 HIGH WALL
SCALE: 3" = 1'-0"

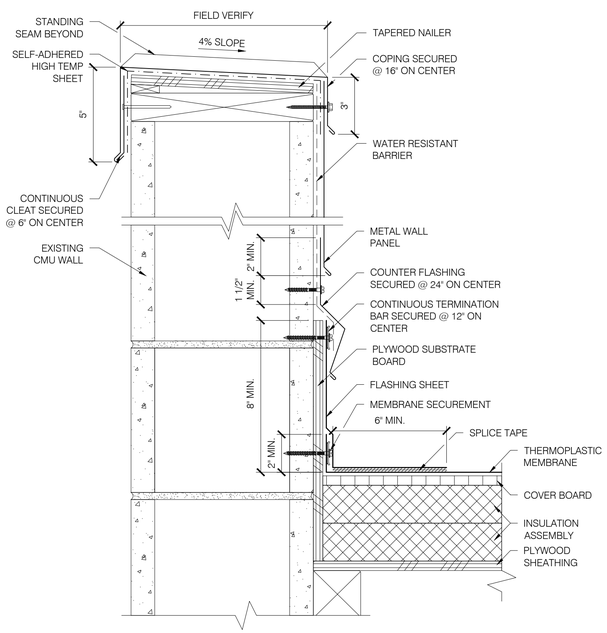


5 R201 PARAPET WALL
SCALE: 3" = 1'-0"

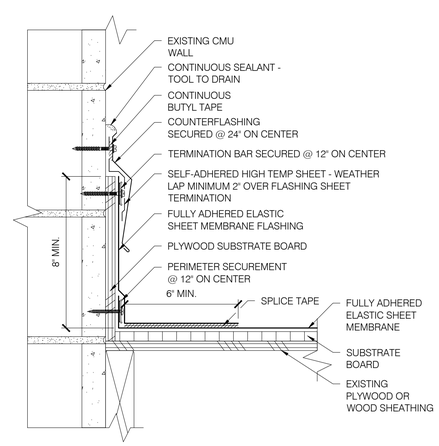


6 R201 HIGH WALL
SCALE: 3" = 1'-0"

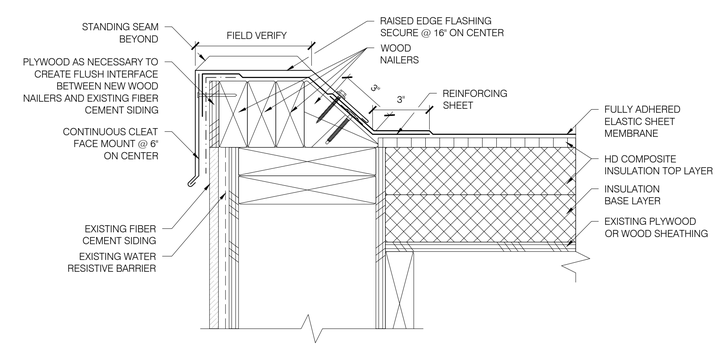


7 R201 RAISED EDGE
SCALE: 3" = 1'-0"

BID SET

PROFESSIONAL ROOF CONSULTANTS INC
1108 SE GRAND AVENUE, SUITE 300
PORTLAND, OREGON 97214
PH. 503 280 8759 FAX: 503 280 8866

BEAVERTON SCHOOL DISTRICT

BARNES ELEMENTARY SCHOOL

ROOF REPLACEMENT

SHEET TITLE:
DETAILS

THESE DRAWINGS ARE THE PROPERTY OF PROFESSIONAL ROOF CONSULTANTS, INC. AND ARE NOT TO BE USED OR REPRODUCED WITHOUT WRITTEN PERMISSION OF PROFESSIONAL ROOF CONSULTANTS, INC.

THE BAR SCALE IS 2-INCHES IN LENGTH. IF THE BAR IS NOT 2-INCHES LONG, THIS DRAWING IS NOT TO THE SCALE INDICATED.

| | |
|---|---|
| Date: | FEB 11, 2020 |
| Revisions: | |
| Drawn: | C.G. |
| Check: | J.F.P. |
| File: | R200-Details |
| Job: | R3055.20 |

SHEET NUMBER:
R201

© Copyright Professional Roof Consultants, Inc. 2019

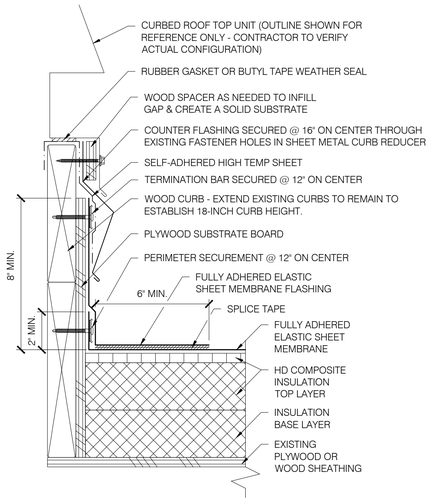


1 R202 CURB MOUNTED ROOF TOP UNIT
SCALE: 3" = 1'-0"

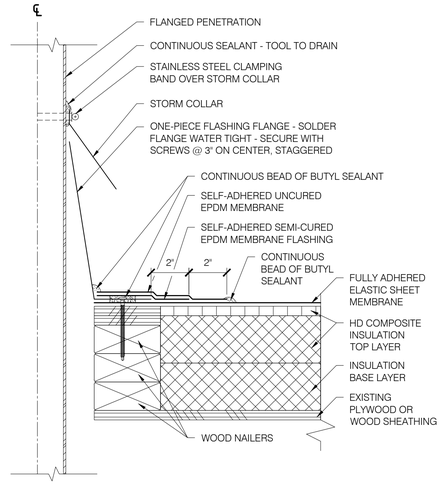


2 R202 HOT PIPE PENETRATION FLASHING
SCALE: 3" = 1'-0"

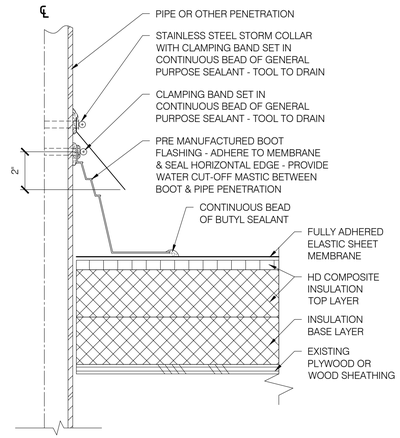


3 R202 PRE-FORMED PENETRATION FLASHING
SCALE: 3" = 1'-0"

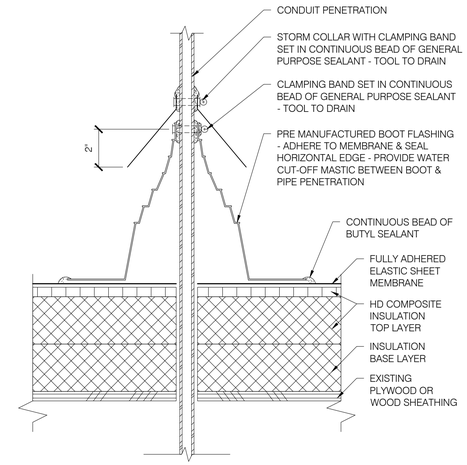


4 R202 ELECTRICAL PENETRATION
SCALE: 3" = 1'-0"

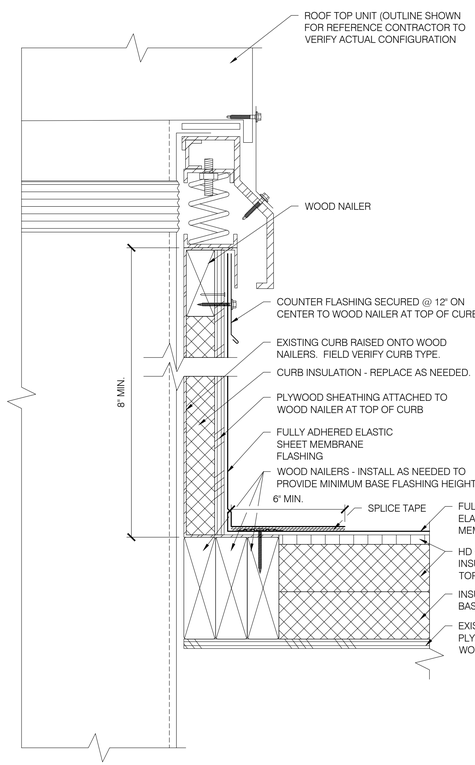


5 R202 CURB MOUNTED ROOF TOP UNIT
SCALE: 3" = 1'-0"

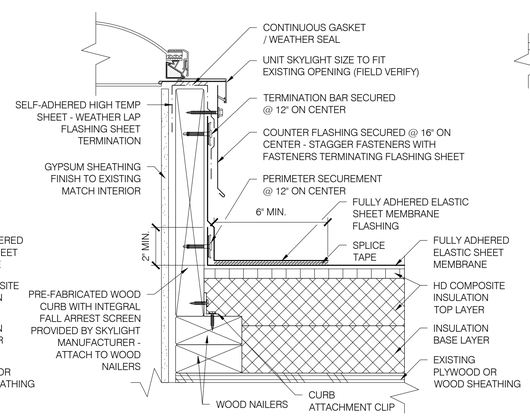


6 R202 CURBED SKYLIGHT
SCALE: 3" = 1'-0"

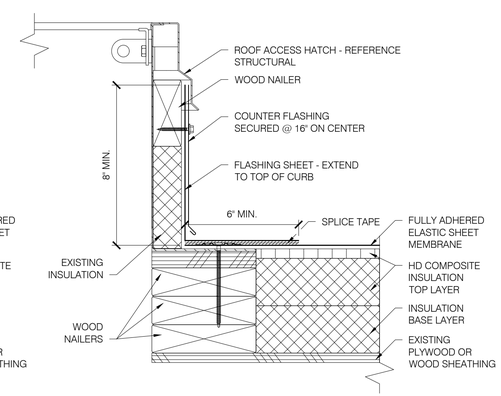


7 R202 ROOF HATCH
SCALE: 3" = 1'-0"

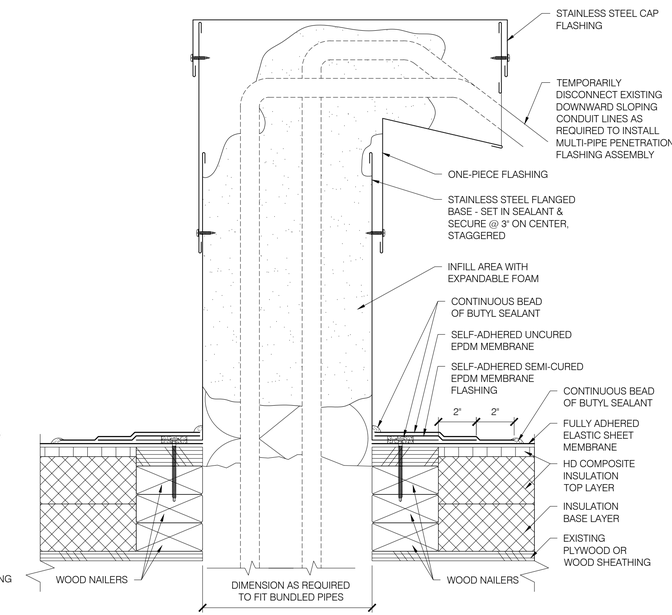


8 R202 MULTI-LINE PENETRATION
SCALE: 3" = 1'-0"

BID SET

PROFESSIONAL ROOF CONSULTANTS INC
1108 SE GRAND AVENUE, SUITE 300
PORTLAND, OREGON 97214
PH. 503 280 8759 FAX: 503 280 8866

BEAVERTON SCHOOL DISTRICT

BARNES ELEMENTARY SCHOOL

ROOF REPLACEMENT

SHEET TITLE:
DETAILS

THESE DRAWINGS ARE THE PROPERTY OF PROFESSIONAL ROOF CONSULTANTS, INC. AND ARE NOT TO BE USED OR REPRODUCED WITHOUT WRITTEN PERMISSION OF PROFESSIONAL ROOF CONSULTANTS, INC.

THE BAR SCALE IS 2-INCHES IN LENGTH. IF THE BAR IS NOT 2-INCHES LONG, THIS DRAWING IS NOT TO THE SCALE INDICATED.

| | |
|---|---|
| Date: | FEB 11, 2020 |
| Revisions: | |
| Drawn: | C.G. |
| Check: | J.F.P. |
| File: | R200-Details |
| Job: | R3055.20 |

SHEET NUMBER:
R202

© Copyright Professional Roof Consultants, Inc. 2019

## GENERAL STRUCTURAL NOTES:

**CODE REQUIREMENTS:**
CONFORM TO THE 2018 INTERNATIONAL BUILDING CODE AS AMENDED BY THE 2019 OREGON STRUCTURAL SPECIALTY CODE, REFERENCED HEREAFTER AS IBC.

**DESIGN CRITERIA:**
DESIGN WAS BASED ON THE STRENGTH AND DEFLECTION CRITERIA OF THE IBC. IN ADDITION TO THE DEAD LOADS, THE FOLLOWING LOADS WERE USED FOR DESIGN:

LADDERS LIVE LOAD: 200 LBS.

GROUND SNOW LOAD Pg: 15 PSF
FLAT-ROOF SNOW LOAD Pf: 25 PSF
SNOW EXPOSURE FACTOR Ce: 1.0
SNOW IMPORTANCE FACTOR Ic: 1.10
THERMAL FACTOR Ct: 1.0

BASIC WIND SPEED (3-SEC GUST, ULTIMATE):
WIND EXPOSURE: 103 MPH
BUILDING RISK CATEGORY: III
BUILDING TYPE: ENCLOSED

SEISMIC IMPORTANCE FACTOR Ie: 1.25
SITE CLASS: D
SDS = .75
SEISMIC DESIGN CATEGORY: D
SEISMIC RISK CATEGORY: III

**EXISTING CONDITIONS:**
THE CONTRACTOR SHALL FIELD VERIFY ALL EXISTING CONDITIONS, DIMENSIONS AND ELEVATIONS. THE CONTRACTOR SHALL NOTIFY THE ENGINEER OF ANY DISCREPANCIES FROM CONDITIONS SHOWN ON THE DRAWINGS PRIOR TO THE START OF THE WORK.

**TEMPORARY CONDITIONS:**
THE CONTRACTOR SHALL BE RESPONSIBLE FOR STRUCTURAL STABILITY OF THE NEW AND EXISTING STRUCTURES AND WALLS DURING CONSTRUCTION. THE STRUCTURE SHOWN ON THE DRAWINGS HAS BEEN DESIGNED FOR STABILITY UNDER THE FINAL CONFIGURATION ONLY.

**SUBMITTALS:**
SHOP DRAWINGS SHALL BE SUBMITTED TO THE ARCHITECT/ENGINEER PRIOR TO FABRICATION AND CONSTRUCTION REGARDING ALL STRUCTURAL ITEMS, INCLUDING THE FOLLOWING:

STRUCTURAL STEEL FABRICATED ITEMS.
FALL PROTECTION SYSTEMS.

IF THE SHOP DRAWINGS DIFFER FROM, OR ADD TO THE DESIGN OF THE STRUCTURAL DRAWINGS, THEY SHALL BE CLEARLY IDENTIFIED. ANY CHANGES TO THE STRUCTURAL DRAWINGS SHALL BE SUBMITTED TO THE ARCHITECT/ENGINEER AND ARE SUBJECT TO REVIEW AND ACCEPTANCE BY THE ENGINEER.

DESIGN DRAWINGS, SHOP DRAWINGS, AND CALCULATIONS FOR THE DESIGN AND FABRICATION OF ITEMS THAT ARE DESIGNED BY OTHERS SHALL BEAR THE SEAL AND SIGNATURE OF A STRUCTURAL ENGINEER REGISTERED IN THE STATE OF OREGON, AND SHALL BE SUBMITTED TO THE ARCHITECT/ENGINEER OF RECORD PRIOR TO FABRICATION. DESIGN SHALL BE BASED ON THE REQUIREMENTS OF THE IBC. THE FOLLOWING ITEMS SHALL BE CONSIDERED DEFERRED SUBMITTALS:

A. HORIZONTAL LIFELINE FALL PROTECTION SYSTEMS

PROVIDE THE SUBMITTALS DIGITALLY (PDF FORMAT) TO THE ENGINEER FOR REVIEW. NECESSARY CORRECTIONS/COMMENTS WILL BE NOTED AND RETURNED.

**CONCRETE AND CMU ACCESSORIES:**
CONCRETE EXPANSION ANCHORS SHALL BE "HILTI KWIK BOLT-TZ" (OR ENGINEER APPROVED EQUIVALENT) INSTALLED PER MANUFACTURER'S GUIDELINES AND CURRENT ESR REPORT. AT CMU APPLICATIONS USE "HILTI KWIK BOLT 3" ANCHORS. DO NOT INSTALL ANCHORS IN OR WITHIN 1 3/8" OF ANY HEAD JOINT PER MANUFACTURER'S RECOMMENDATIONS.

**METALS:**
ALL MISCELLANEOUS STEEL: ASTM A36 (Fy=36,000 PSI), OR AS NOTED ASTM A572 (Fy=50 KSI).
SQUARE AND RECTANGULAR HSS: ASTM A500, GRADE "C" (Fy=50,000 PSI).
STRUCTURAL PIPE: ASTM A53, GRADE "B" (Fy=35,000 PSI).
ALL BOLTS: ASTM A325 UNLESS NOTED OTHERWISE.
THREADED RODS: ASTM A36 UNLESS NOTED OTHERWISE.
WELDING: PER AWS STANDARDS. E70XX ELECTRODE AND BY CERTIFIED WELDERS.
ALL STEEL TO HAVE SHOP COAT.
ALL EXPOSED STEEL BELOW FINISH GRADE TO BE COATED WITH ASPHALTIC PAINT PRIOR TO BACKFILLING.
ALL STEEL EXPOSED TO WEATHER SHALL BE HOT DIP GALVANIZED PER ASTM 123 FOR STRUCTURAL STEEL AND ASTM 153 FOR BOLTS AND HARDWARE. FABRICATION OF STEEL THAT IS TO BE HOT DIP GALVANIZED SHALL ALSO MEET ASTM A385. REPAIR OF DAMAGED GALVANIZED COATING SHALL BE MADE WITH PRODUCTS MEETING ASTM A780 AND AS A MINIMUM SHALL BE 50% GREATER IN THICKNESS THAN THE SURROUNDING GALVANIZING.

DESIGN, FABRICATION, AND ERECTION SHALL BE IN ACCORDANCE WITH THE "AISC SPECIFICATION FOR STRUCTURAL STEEL BUILDINGS". WELDING SHALL CONFORM TO THE AWS CODES FOR ARC AND GAS WELDING IN BUILDING CONSTRUCTION AND SHALL BE 3/16" MINIMUM UNLESS OTHERWISE NOTED. WELDING SHALL BE BY AWS CERTIFIED WELDERS. PREQUALIFIED WELDING PROCEDURES ARE TO BE USED, UNLESS AWS QUALIFICATION IS SUBMITTED TO THE ARCHITECT/ENGINEER PRIOR TO FABRICATION.

INSTALLATION AND TIGHTENING OF ALL BOLTS SHALL BE IN ACCORDANCE WITH THE "SPECIFICATIONS FOR STRUCTURAL JOINTS USING ASTM A325 OR A490 BOLTS". UNLESS NOTED OTHERWISE BOLTS SHALL BE INSTALLED IN ALL HOLES OF THE CONNECTION AND BROUGHT TO A SNUG-TIGHT CONDITION. SNUG TIGHT IS DEFINED AS THE TIGHTNESS THAT EXISTS WHEN THE PLIES OF THE JOINT ARE IN FIRM CONTACT. THIS MAY BE ATTAINED BY A FEW IMPACTS OF AN IMPACT WRENCH OR THE FULL EFFORT OF A MAN USING AN ORDINARY SPUD WRENCH.

**CARPENTRY:**
SAWN LUMBER DESIGN IS BASED ON THE NATIONAL DESIGN SPECIFICATION, LATEST EDITION. SAWN LUMBER SHALL CONFORM TO WEST COAST LUMBER INSPECTION BUREAU OR WESTERN WOOD PRODUCTS ASSOCIATION GRADING RULES. UNLESS NOTED OTHERWISE ALL LUMBER SHALL BE 19% AT TIME OF FABRICATION AND DRIED TO A MAXIMUM OF 15% BEFORE INSTALLATION OF GYP. BOARD AND OF BRICK VENEER AND VERIFIED BY THE GENERAL CONTRACTOR. ALL WOOD IN PERMANENT CONTACT WITH CONCRETE OR CMU SHALL BE PRESSURE TREATED UNLESS AN APPROVED BARRIER IS PROVIDED. GRADES SHALL BE DF-#2 UNLESS NOTED OTHERWISE ON THE PLANS.

FRAMING ACCESSORIES AND STRUCTURAL FASTENERS SHALL BE MANUFACTURED BY SIMPSON STRONG-TIE COMPANY (OR ENGINEER APPROVED EQUAL) AND OF THE SIZE AND TYPE SHOWN ON THE DRAWINGS AND ATTACHED PER MANUFACTURER'S REQUIREMENTS AND RECOMMENDATIONS UNLESS NOTED OTHERWISE. HANGERS NOT SHOWN SHALL BE SIMPSON HU OF SIZE RECOMMENDED FOR MEMBER. ALL FRAMING NAILS SHALL BE COMMON NAILS. NO BOX NAILS ALLOWED. FASTENERS AND ACCESSORIES IN CONTACT WITH PRESERVATIVE TREATED WOOD MUST BE HOT DIPPED GALVANIZED OR HAVE ZMAX COATING. ALL FASTENERS IN CONTACT WITH FIRE RETARDANT LUMBER MUST BE HOT-DIPPED GALVANIZED. DO NOT INSTALL 0.148" x 1 1/2" NAILS IN HANGERS UNLESS SPECIFICALLY NOTED ON THE PLANS & DETAILS.

SHEATHING PANELS SHALL CONFORM TO THE REQUIREMENTS OF VOLUNTARY PRODUCT STANDARD PS 1 OR PS 2, OR APA PRP-108 PERFORMANCE STANDARDS. UNLESS NOTED, PANELS SHALL BE APA RATED SHEATHING, EXPOSURE 1, OF THE THICKNESS AND SPAN RATING SHOWN ON THE DRAWINGS. INSTALLATION SHALL BE IN CONFORMANCE WITH APA RECOMMENDATIONS. ALLOW 1/8" SPACING AT PANEL ENDS AND EDGES, UNLESS OTHERWISE RECOMMENDED BY THE PANEL MANUFACTURER.

ALL ROOF SHEATHING SHALL BE INSTALLED WITH FACE GRAIN PERPENDICULAR TO SUPPORTS, EXCEPT AS INDICATED ON THE DRAWINGS. ROOF SHEATHING SHALL EITHER BE BLOCKED, TONGUE-AND-GROOVE, OR HAVE EDGES SUPPORTED BY PLYCLIPS. NAILING NOT SPECIFICALLY IDENTIFIED ON THE DRAWINGS SHALL CONFORM TO IBC TABLE 2304.9.1.

ALL MULTIPLE STUD OR SOLID POST POINT LOAD SUPPORTS TO EXTEND THROUGH ALL FRAMING BELOW TO SOLID BEARING AT FOUNDATION OR CARRYING GIRDER. PROVIDE FULL BEARING WITHIN JOIST SPACE AS REQUIRED.

GLUED LAMINATED MEMBERS SHALL BE FABRICATED IN CONFORMANCE WITH AMERICAN INSTITUTE OF TIMBER CONSTRUCTION, AITC A190.1 AND ASTM D 3737. EACH MEMBER SHALL BEAR AN AITC OR APA-EWS IDENTIFICATION MARK AND BE ACCOMPANIED BY A CERTIFICATE OF CONFORMANCE. ONE COAT OF END SEALER SHALL BE APPLIED IMMEDIATELY AFTER TRIMMING IN EITHER SHOP OR FIELD. GLULAM HANGERS NOT SHOWN SHALL BE SIMPSON EG. BEAMS SHALL BE VISUALLY GRADED WESTERN SPECIES INDUSTRIAL GRADE, AND OF THE STRENGTH INDICATED BELOW:

| DEPTH | COMBINATION SYMBOL | SPECIES | USE |
|---|---|---|---|
| ALL | 24F - V4 | DF/DF | (SIMPLE SPAN) |
| ALL | 24F - V8 | DF/DF | (CONTINUOUS OR CANTILEVER) |

**MECHANICAL:**
THE CONTRACTOR SHALL COORDINATE SEISMIC RESTRAINTS OF ELECTRICAL EQUIPMENT, MECHANICAL, PLUMBING, FIRE SPRINKLER, MACHINERY, AND ASSOCIATED PIPING WITH THE STRUCTURE. ANY CONNECTIONS TO STRUCTURE NOT CONFORMING TO SHEET METAL AND AIR CONDITIONING CONTRACTORS NATIONAL ASSOCIATION (SMACNA), OR SPECIFICALLY DETAILED ON THE MECHANICAL ENGINEER'S DRAWINGS, SHALL BE DESIGNED IN ACCORDANCE OF THESE GENERAL NOTES, BY AN ENGINEER REGISTERED IN THE STATE OF OREGON, AND SHALL BE SUBMITTED TO THE ENGINEER PRIOR TO FABRICATION.

**FLASHING AND WATERPROOFING:**
ALL FLASHING AND WATERPROOFING SHALL BE PER PROFESSIONAL ROOF CONSULTANTS DRAWINGS..

**STRUCTURAL OBSERVATIONS:**
STRUCTURAL OBSERVATIONS BY THE ENGINEER OF RECORD OR AN APPOINTED REPRESENTATIVE SHALL BE REQUIRED AT THE FOLLOWING TIMES DURING CONSTRUCTION:

UPON COMPLETION OF ALL LADDER INSTALLATIONS, PRIOR TO COVERING WITH ANY FINISH MATERIALS.

THE CONTRACTOR SHALL NOTIFY THE ENGINEER (4) FOUR DAYS PRIOR TO THE COMPLETION POINT REQUIRING SITE OBSERVATION.

NOTE: STRUCTURAL OBSERVATIONS BY THE ENGINEER OF RECORD IN NO WAY RELIEVES THE SPECIAL INSPECTOR OR BUILDING OFFICIAL OF THEIR INSPECTION RESPONSIBILITIES.

**INSPECTION:**
SPECIAL INSPECTIONS: IN ACCORDANCE WITH SECTION 1704 OF THE IBC AND APPLICABLE SECTIONS OF THE PROJECT SPECIFICATIONS. SPECIAL INSPECTIONS ARE TO BE PERFORMED BY AN INDEPENDENT TESTING LABORATORY EMPLOYED BY THE OWNER FOR THE AREAS INDICATED IN THE SPECIAL INSPECTION PROGRAM.

THE CONTRACTOR AND SPECIAL INSPECTOR SHALL NOTIFY THE ENGINEER OF RECORD OF ANY ITEM NOT COMPLYING WITH THE PROJECT SPECIFICATIONS AND/OR APPLICABLE CODES BEFORE PROCEEDING WITH ANY WORK INVOLVING THAT ITEM. THE ENGINEER OF RECORD WILL REVIEW THE ITEM AND DETERMINE ACCEPTABILITY. IF WORK INVOLVING THAT ITEM PROCEEDS WITHOUT THE APPROVAL OF THE ENGINEER OF RECORD THEN THE WORK WILL BE CONSIDERED NON-COMPLIANT.

**SPECIAL INSPECTION PROGRAM**
ESTABLISHED PER 2018 IBC AS AMENDED BY THE 2019 OSSC SECTION 110 & CHAPTER 17

| ITEM | CONTINUOUS | PERIODIC | COMMENTS |
|---|---|---|---|
| **GENERAL STRUCTURAL INSPECTIONS AS REQUIRED BY SECTION 110** | | | |
| FINAL INSPECTION | | | BY BUILDING OFFICIAL |
| | | | |
| **STEEL** | | | |
| IN ACCORDANCE WITH OSSC 1705.2 AND QUALITY ASSURANCE INSPECTION REQUIREMENTS OF AISC 360 | | | |
| MATERIAL VERIFICATION OF STRUCTURAL STEEL | | X | AISC 360, SECTION M5.5 AND APPLICABLE ASTM STANDARDS |
| COMPLIANCE OF STEEL FRAME JOINTS TO CONSTRUCTION DOCUMENT DETAILS | | X | |
| | | | |
| **WELDING: STRUCTURAL STEEL** | | | |
| MATERIAL VERIFICATION OF WELD FILLER MATERIALS | | X | AISC 360, SECTION A3.5, AWS A5 DOCUMENTS |
| SINGLE PASS FILLETS ≤ 5/16" | | X | |
| | | | |
| | | | |
| **CONCRETE** | | | |
| EXPANSION OR SCREW ANCHOR PLACEMENT | | X | CONTINUOUS WHERE INDICATED ON DRAWINGS |
| | | | |
| **MASONRY: LEVEL B INSPECTION** (FOR ALL ITEMS REFERENCE ACI 530 AND ACI 530.1 - TABLE 4) | | | |
| EXPANSION OR SCREW ANCHOR PLACEMENT | | X | |
| | | | |
| **FALL PROTECTION SYSTEMS** | | | |
| VERIFICATION OF INSTALLATION OF ALL SYSTEM COMPONENTS IN ACCORDANCE WITH MANUFACTURER'S INSTRUTIONS | | X | OREGON OSHA AND ANSI/ASSE Z359 |
| | | | |

NOTE: THE SPECIAL INSPECTION PROGRAM FOR SOILS AND ANY PILE OR PIER FOUNDATIONS IS PER THE GEOTECHNICAL ENGINEER, REFERENCE IBC 1705.6, 1705.7, 1705.8 AND 1705.9.

DEFINITIONS:
A. CONTINUOUS INSPECTION MEANS THAT THE SPECIAL INSPECTOR IS ON SITE AT ALL TIMES OBSERVING THE WORK REQUIRING SPECIAL INSPECTION.
B. PERIODIC INSPECTION MEANS THAT THE SPECIAL INSPECTOR IS ON SITE AT TIME INTERVALS NECESSARY TO CONFIRM THAT THE WORK REQUIRING SPECIAL INSPECTION IS IN CONFORMANCE WITH APPROVED PERMIT PLANS AND SPECIFICATIONS.

## FALL PROTECTION GENERAL STRUCTURAL NOTES:

**CODE REQUIREMENTS:**
1. CONFORM TO THE 2018 INTERNATIONAL BUILDING CODE AS AMENDED BY THE 2019 OREGON STRUCTURAL SPECIALTY CODE, REFERENCED HEREAFTER AS IBC.
2. CONFORM TO OREGON OSHA STANDARDS FOR THE CONSTRUCTION INDUSTRY SUBPART M (FALL PROTECTION) AND ALL APPLICABLE STATE ADMINISTRATIVE CODE SAFETY STANDARDS.
3. CONFORM TO ANSI/ASSE Z359 AMERICAN NATIONAL STANDARD, CURRENT EDITION.

**SYSTEM REQUIREMENTS:**
1. INDIVIDUAL ANCHORS SHALL BE USED FOR A MAXIMUM OF ONE PERSON IN FALL ARREST OR FALL RESTRAINT.
2. HORIZONTAL LIFE LINES (HLL's) SHALL BE USED FOR A MAXIMUM OF TWO PERSONS ATTACHED IN FALL ARREST OR FALL RESTRAINT.
3. PERSONAL FALL ARREST SYSTEMS (PFAS) SHALL BE LIMITED TO FULL BODY HARNESSES THAT LIMIT THE MAXIMUM FALL ARREST LOAD TO 900 LBS.
4. ANCHORS AND LIFE LINES ARE TO BE USED ONLY BY PERSONS TRAINED IN THEIR USE. LANYARDS, SAFETY HARNESSES, ATTACHMENTS, AND ALL OTHER PERSONAL SAFETY DEVICES ATTACHED TO THE ANCHOR ARE THE SOLE RESPONSIBILITY OF THE USER AND NOT TM RIPPEY CONSULTING ENGINEERS.
5. ANCHORS AND HLL ARE TO BE VISUALLY INSPECTED BY THE USER PRIOR TO EACH USE.
6. ANCHORS AND HLL ARE TO BE INSPECTED ANNUALLY BY A 'QUALIFIED PERSON'.
7. ANCHORS SHALL BE RE-CERTIFIED BY A 'COMPETENT PERSON' WHEN RE-ROOFING OR RENOVATION OR AT PERIODS NOT TO EXCEED 10 YEARS.
8. THE SYSTEM USER IS TO MAINTAIN A LOG BOOK OF USE AND INSPECTION.
9. FALL PROTECTION SYSTEMS SERVING ROOF EDGES WITH INSUFFICIENT HEIGHT FOR FALL ARREST CLEARANCE SHALL BE CLEARLY IDENTIFIED AS 'FALL RESTRAINT' ONLY.

**ANCHOR LOADS:**
ULTIMATE ANCHOR LOAD: 5000 LB
ALLOWABLE LOAD: 310 LB (PER PERSON, COMBINED BODY WEIGHT AND TOOLS).
MAXIMUM TIP-OVER ANCHOR ACTIVATION LOAD: 900 LBS.
MAXIMUM TIP-OVER LOAD APPLIED TO ROOF STRUCTURE: 1350 LBS.
SYSTEM MAXIMUM ARREST FORCE (MAF): 900 LBS.
SYSTEM MAXIMUM ARREST LOAD (MAL) SHALL BE BASED ON TWO PERSONS WITHIN A SINGLE SPAN.

**PRODUCTS:**
1. SINGLE POINT FALL ARREST ANCHORS - 'GUARDIAN CB18', OR EQUIVALENT APPROVED BY THE ENGINEER.
2. HORIZONTAL LIFE LINE - DBI-SALA 'ROOFSAFE' TIP-OVER ANCHOR AND CABLE SYSTEM OR EQUIVALENT APPROVED BY THE ENGINEER.
3. HLL CABLE - CONTINUOUS STAINLESS STEEL. CABLE SHALL BE THE PRODUCT OF DBI/SALA OR EQUIVALENT APPROVED BY THE ENGINEER.

**SUBMITTALS:**
HORIZONTAL LIFELINE FALL PROTECTION SYSTEM IS A DEFERRED SUBMITTAL:
SHOP DRAWINGS SHALL BE SUBMITTED TO THE ENGINEER PRIOR TO FABRICATION AND CONSTRUCTION AND SHALL BE STAMPED BY AN ENGINEER REGISTERED IN THE STATE OF OREGON.

PROVIDE THE SUBMITTALS DIGITALLY (PDF FORMAT) TO THE ENGINEER FOR REVIEW. NECESSARY CORRECTIONS/COMMENTS WILL BE NOTED AND RETURNED.

**INSTALLATION:**
1. INSTALL IN ACCORDANCE WITH APPROVED SHOP DRAWINGS AND MANUFACTURER'S INSTRUCTIONS.
2. SYSTEM SHALL BE INSTALLED UNDER THE DIRECTION OF THE MANUFACTURER'S AUTHORIZED TRAINED PERSONNEL AND UNDER THE SUPERVISION OF A QUALIFIED PERSON.
3. DO NOT LOAD OR STRESS THE FALL PROTECTION SYSTEM UNTIL ALL MATERIALS AND FASTENERS ARE PROPERLY INSTALLED AND READY FOR SERVICE.


7650 SW Beveland, Suite 100
Tigard, Oregon 97223
Phone: (503) 443-3900
Fax: (503) 443-3700
TMR T.M. RIPPEY CONSULTING ENGINEERS


REGISTERED PROFESSIONAL ENGINEER
16,720
OREGON
JULY 20, 1993
RALPH TURNBAUGH
EXP: 6/30/20


PROFESSIONAL ROOF CONSULTANTS INC
1108 SE GRAND AVENUE, SUITE 300
PORTLAND, OREGON 97214
PH. 503 280 8759 FAX: 503 280 8866


BEAVERTON SCHOOL DISTRICT
BARNES ELEMENTARY SCHOOL
ROOF REPLACEMENT

SHEET TITLE:
GENERAL NOTES


THESE DRAWINGS ARE THE PROPERTY OF PROFESSIONAL ROOF CONSULTANTS, INC. AND ARE NOT TO BE USED OR REPRODUCED WITHOUT WRITTEN PERMISSION OF PROFESSIONAL ROOF CONSULTANTS, INC.


THE BAR SCALE IS 2 INCHES IN LENGTH. IF THE BAR IS NOT 2 INCHES LONG, THIS DRAWING IS NOT TO THE SCALE INDICATED.

Date: FEB. 11, 2020
Revisions:

Drawn: JSC, CTT
Check: RNT
File:
TMR Job Number: 19347

BID SET

SHEET NUMBER:
S000


© Copyright Professional Roof Consultants, Inc. 2019

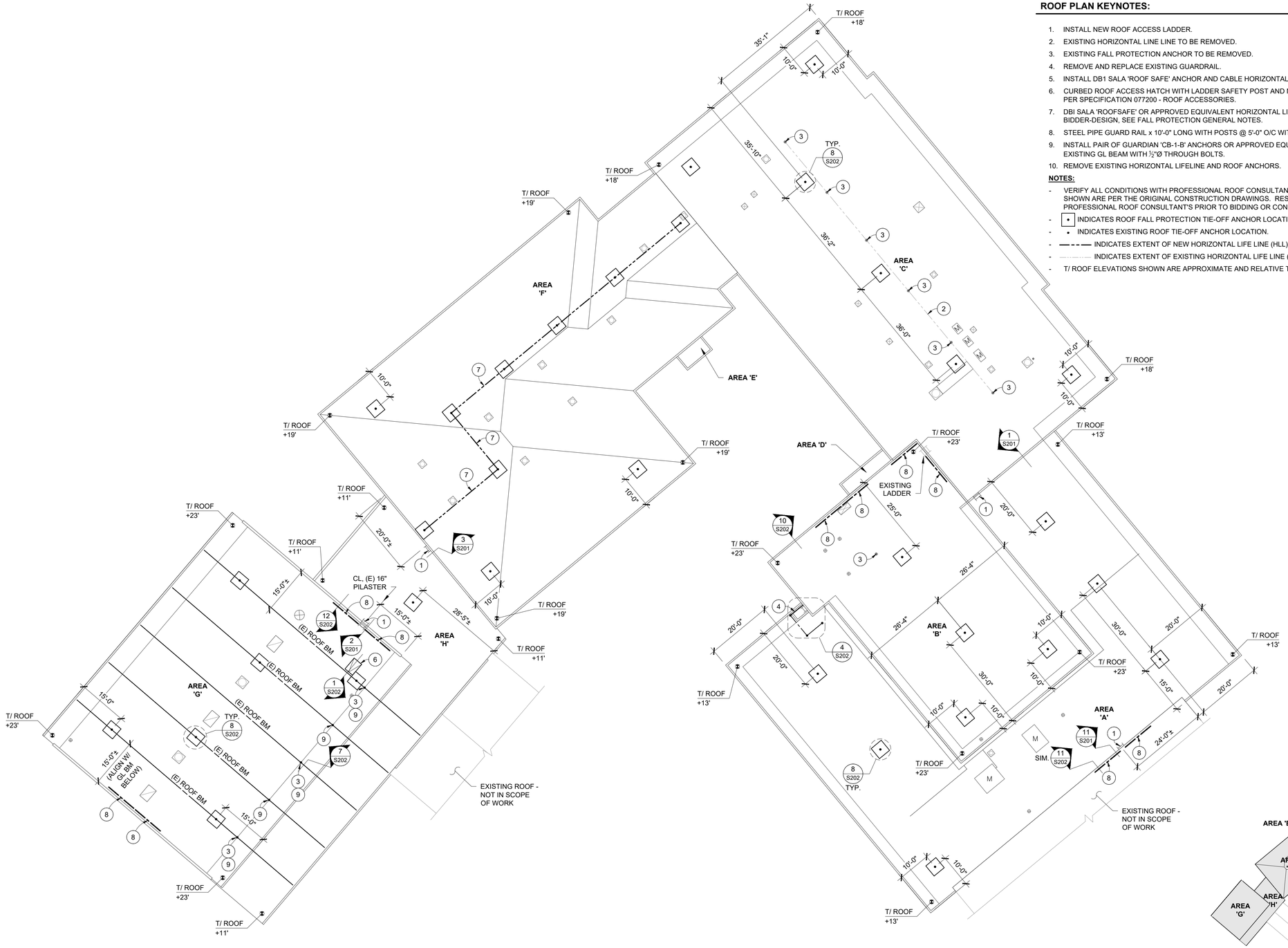


## ROOF PLAN KEYNOTES:

1. INSTALL NEW ROOF ACCESS LADDER.
2. EXISTING HORIZONTAL LINE LINE TO BE REMOVED.
3. EXISTING FALL PROTECTION ANCHOR TO BE REMOVED.
4. REMOVE AND REPLACE EXISTING GUARDRAIL.
5. INSTALL DB1 SALA 'ROOF SAFE' ANCHOR AND CABLE HORIZONTAL LIFE LINE.
6. CURBED ROOF ACCESS HATCH WITH LADDER SAFETY POST AND NON-PENETRATING GUARDRAIL PER SPECIFICATION 077200 - ROOF ACCESSORIES.
7. DBI SALA 'ROOFSAFE' OR APPROVED EQUIVALENT HORIZONTAL LIFE-LINE. SYSTEM IS BIDDER-DESIGN, SEE FALL PROTECTION GENERAL NOTES.
8. STEEL PIPE GUARD RAIL x 10'-0" LONG WITH POSTS @ 5'-0" O/C WITH (3) PER SECTION.
9. INSTALL PAIR OF GUARDIAN 'CB-1-B' ANCHORS OR APPROVED EQUIVALENT, (1) EACH SIDE OF EXISTING GL BEAM WITH ½"Ø THROUGH BOLTS.
10. REMOVE EXISTING HORIZONTAL LIFELINE AND ROOF ANCHORS.

**NOTES:**

- VERIFY ALL CONDITIONS WITH PROFESSIONAL ROOF CONSULTANT'S DRAWINGS. DIMENSIONS SHOWN ARE PER THE ORIGINAL CONSTRUCTION DRAWINGS. RESOLVE ANY DISCREPANCIES WITH PROFESSIONAL ROOF CONSULTANT'S PRIOR TO BIDDING OR CONSTRUCTION.
- [•] INDICATES ROOF FALL PROTECTION TIE-OFF ANCHOR LOCATION, SEE DETAIL 8/S202.
- • INDICATES EXISTING ROOF TIE-OFF ANCHOR LOCATION.
- — — — INDICATES EXTENT OF NEW HORIZONTAL LIFE LINE (HLL).
- — · — · — INDICATES EXTENT OF EXISTING HORIZONTAL LIFE LINE (HLL).
- T/ ROOF ELEVATIONS SHOWN ARE APPROXIMATE AND RELATIVE TO ADJACENT GROUND SURFACE.

NORTH

1 / S100 PARTIAL ROOF PLAN
AREAS: A, B, C, D, E, F, G, & H
SCALE: 1/16" = 1'-0"

0 4' 8' 16'

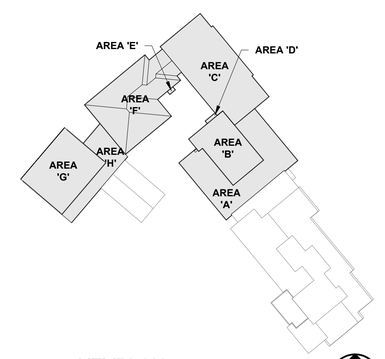


KEYPLAN
X_KEYPLAN
N.T.S.

BID SET


7650 SW Beveland, Suite 100
Tigard, Oregon 97223
Phone: (503) 443-3900
Fax: (503) 443-3700

TMR
T.M. RIPPEY
CONSULTING ENGINEERS

REGISTERED PROFESSIONAL ENGINEER
16,720
OREGON
JULY 20, 1993
RALPH TURNBAUGH
EXP: 6/30/20

PROFESSIONAL ROOF CONSULTANTS INC
1108 SE GRAND AVENUE, SUITE 300
PORTLAND, OREGON 97214
PH. 503 280 8759 FAX: 503 280 8866


# BEAVERTON SCHOOL DISTRICT
# BARNES ELEMENTARY SCHOOL
# ROOF REPLACEMENT

SHEET TITLE:
PARTIAL ROOF PLAN


THESE DRAWINGS ARE THE PROPERTY OF PROFESSIONAL ROOF CONSULTANTS, INC. AND ARE NOT TO BE USED OR REPRODUCED WITHOUT WRITTEN PERMISSION OF PROFESSIONAL ROOF CONSULTANTS, INC.


THE BAR SCALE IS 2 INCHES IN LENGTH. IF THE BAR IS NOT 2 INCHES LONG, THIS DRAWING IS NOT TO THE SCALE INDICATED.

Date: FEB. 11, 2020
Revisions:

Drawn: JSC, CTT
Check: RNT
File:
TMR Job Number: 19347

SHEET NUMBER:
S100


© Copyright Professional Roof Consultants, Inc. 2019

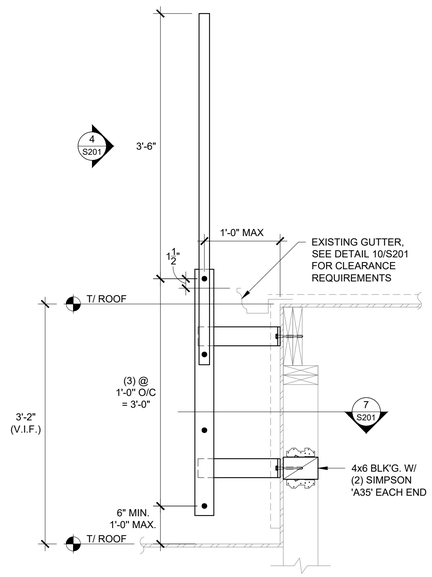


1 S201 LADDER SECTION
19347-01
SCALE: 1" = 1'-0"

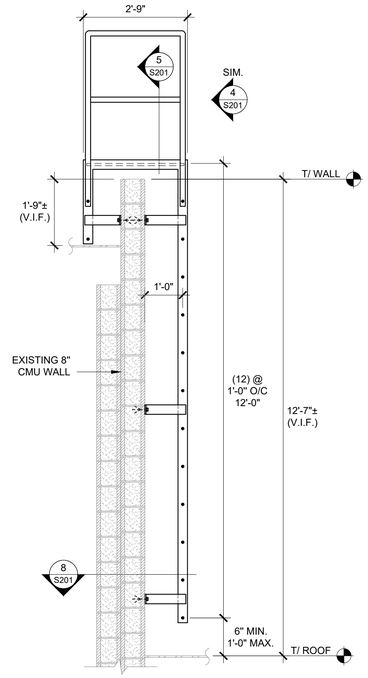


2 S201 LADDER SECTION
19347-02
SCALE: 1/2" = 1'-0"

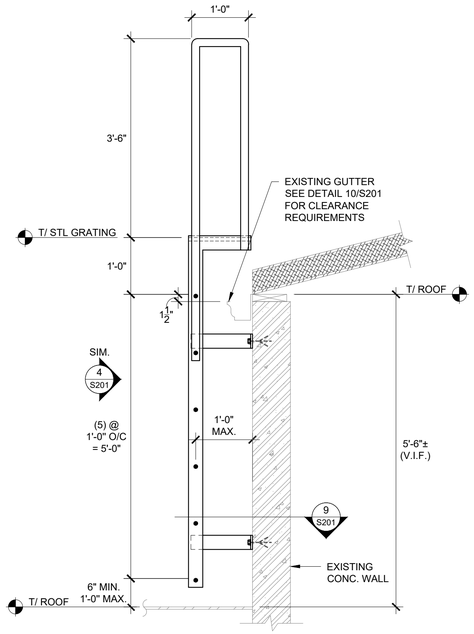


3 S201 LADDER SECTION
19347-03
SCALE: 3/4" = 1'-0"

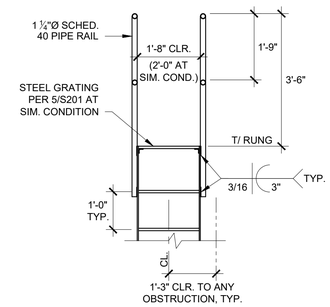


4 S201 LADDER ELEVATION
19347-04
SCALE: 1/2" = 1'-0"

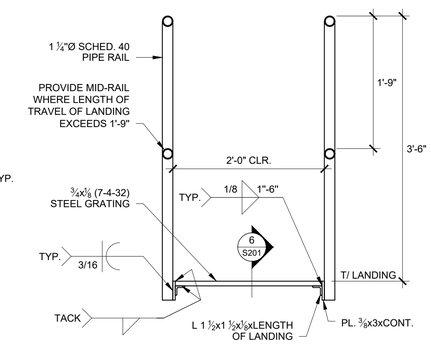


5 S201 LANDING SECTION
19347-05
SCALE: 1" = 1'-0"

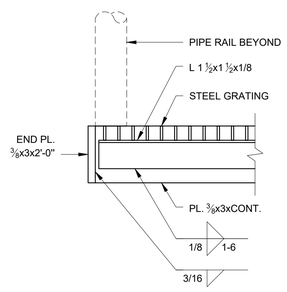


6 S201 SECTION
19347-06
SCALE: 3" = 1'-0"

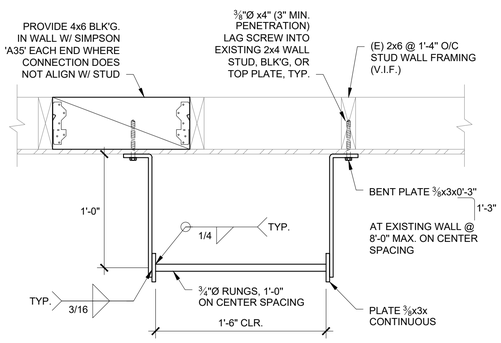


7 S201 LADDER / WALL CONNECTION
18347-07
SCALE: 1 1/2" = 1'-0"

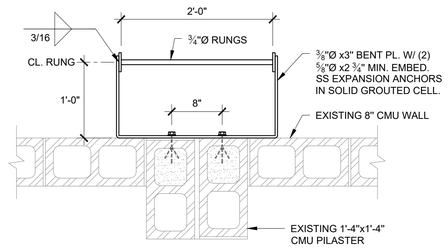


8 S201 LADDER / WALL CONNECTION
19347-08
SCALE: 1" = 1'-0"

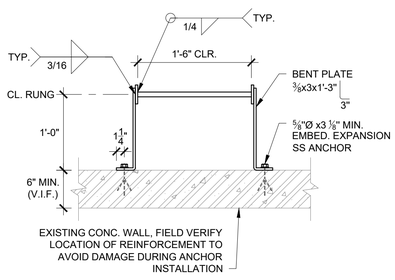


9 S201 LADDER / WALL CONNECTION
19347-09
SCALE: 1" = 1'-0"

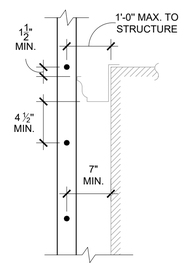


10 S201 CLEARANCE AT OBSTRUCTION
19347-10
SCALE: 1" = 1'-0"

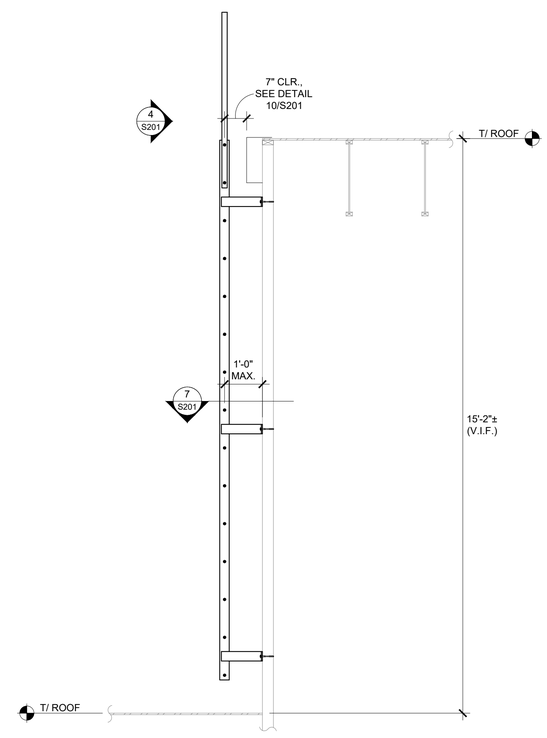


11 S201 LADDER SECTION - AREA 'N'
19347-14
SCALE: 1/2" = 1'-0"

BID SET


TMR
T.M. RIPPEY
CONSULTING ENGINEERS
7650 SW Beveland, Suite 100
Tigard, Oregon 97223
Phone: (503) 443-3900
Fax: (503) 443-3780


REGISTERED PROFESSIONAL ENGINEER
16,720
OREGON
JULY 20, 1993
RALPH TURNBAUGH
EXP: 6/30/20


PROFESSIONAL ROOF CONSULTANTS INC
1108 SE GRAND AVENUE, SUITE 300
PORTLAND, OREGON 97214
PH. 503 280 8759 FAX: 503 280 8866


# BEAVERTON SCHOOL DISTRICT
# BARNES ELEMENTARY SCHOOL
# ROOF REPLACEMENT

SHEET TITLE:
DETAILS


THESE DRAWINGS ARE THE PROPERTY OF PROFESSIONAL ROOF CONSULTANTS, INC. AND ARE NOT TO BE USED OR REPRODUCED WITHOUT WRITTEN PERMISSION OF PROFESSIONAL ROOF CONSULTANTS, INC.


THE BAR SCALE IS 2 INCHES IN LENGTH. IF THE BAR IS NOT 2 INCHES LONG, THIS DRAWING IS NOT TO THE SCALE INDICATED.

Date: FEB. 11, 2020
Revisions:

Drawn: JSC, CTT
Check: RNT
File:
TMR Job Number: 19347

SHEET NUMBER:
S201


© Copyright Professional Roof Consultants, Inc. 2019

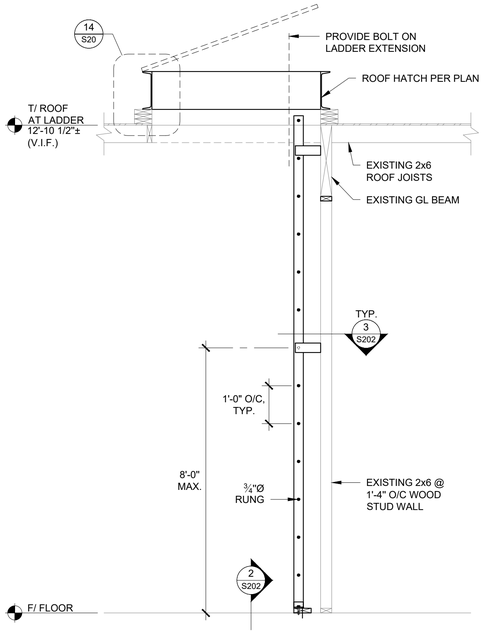


1 S202 LADDER SECTION - AREA 'G'
19347–11
SCALE: 1/2" = 1'-0"

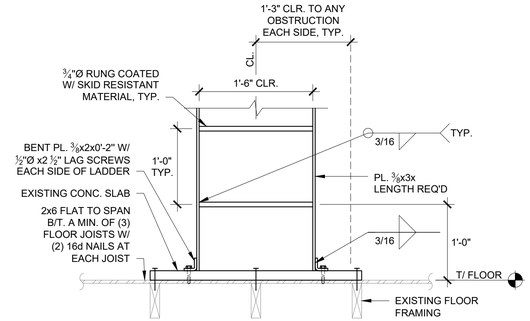


2 S202 LADDER / SLAB CONNECTION
19347–13
SCALE: 1" = 1'-0"

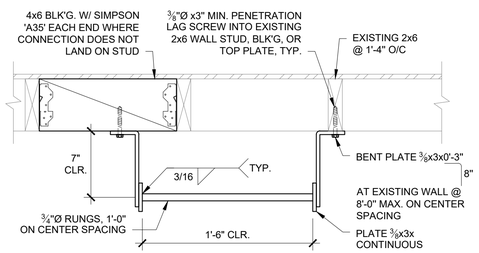


3 S202 LADDER / WALL CONNECTION
19347–12
SCALE: 1 1/2" = 1'-0"

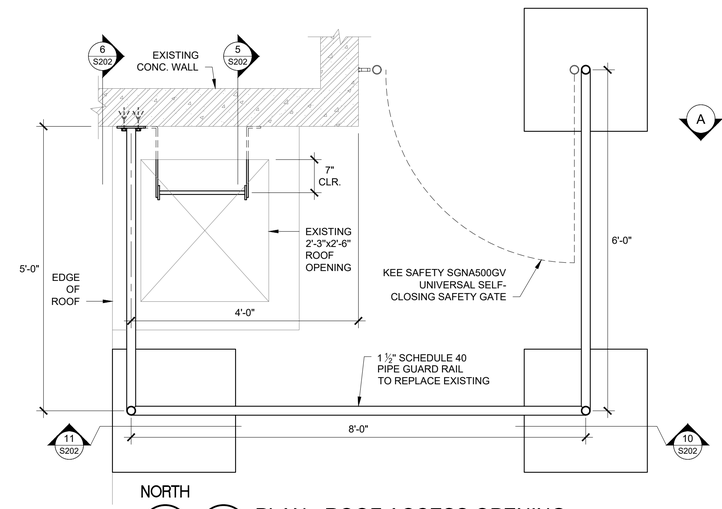


4 S202 PLAN - ROOF ACCESS OPENING
19347–15
SCALE: 1" = 1'-0"

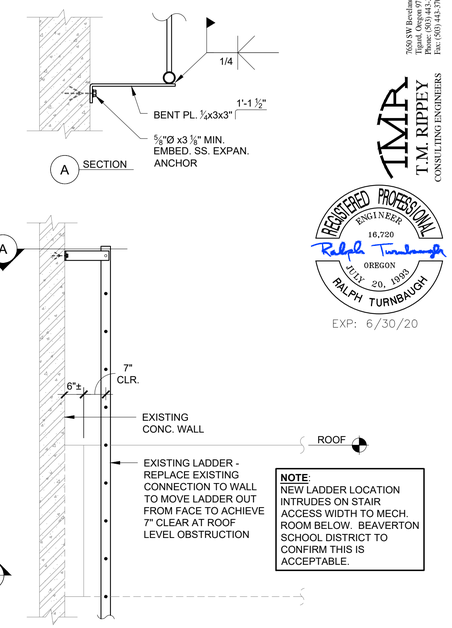


**NOTE:**
NEW LADDER LOCATION INTRUDES ON STAIR ACCESS WIDTH TO MECH. ROOM BELOW. BEAVERTON SCHOOL DISTRICT TO CONFIRM THIS IS ACCEPTABLE.

5 S202 LADDER SECTION
19347–16
SCALE: 1/2" = 1'-0"

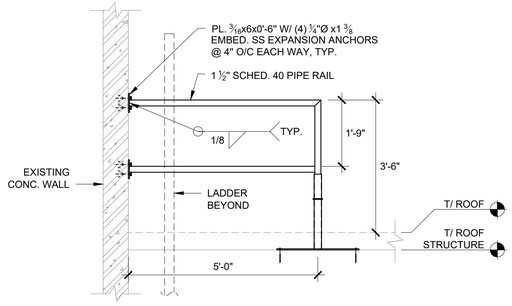


6 S202 GUARD RAIL ELEVATION
19347–17
SCALE: 1/2" = 1'-0"

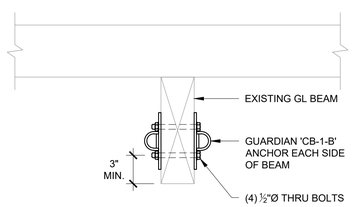


7 S202 BEAM SECTION
19347–18
SCALE: 1 1/2" = 1'-0"

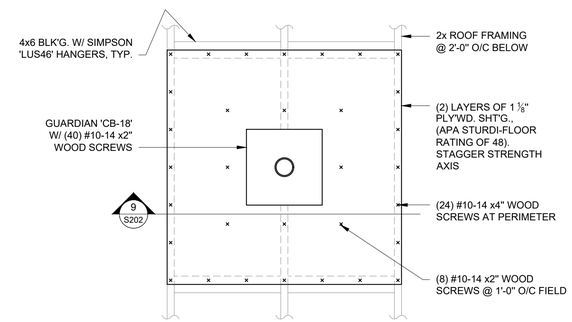


8 S202 PLAN VIEW - FALL PROTECTION ANCHOR
19347–19
SCALE: 1 1/2" = 1'-0"

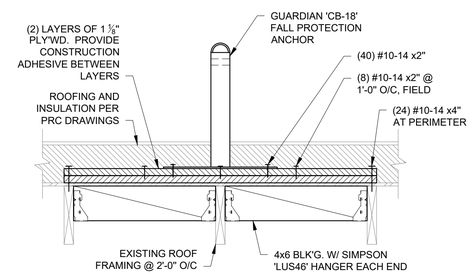


9 S202 'FALL PROTECTION' ANCHOR
19347–20
SCALE: 1" = 1'-0"

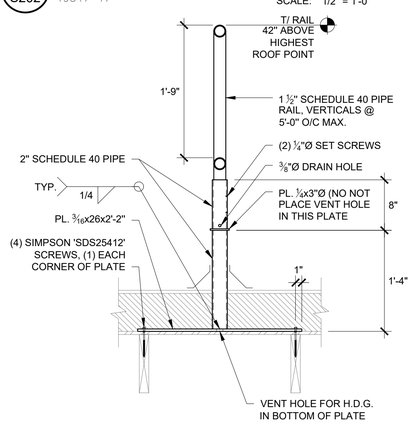


10 S202 GUARD RAIL
19347–21
SCALE: 1" = 1'-0"

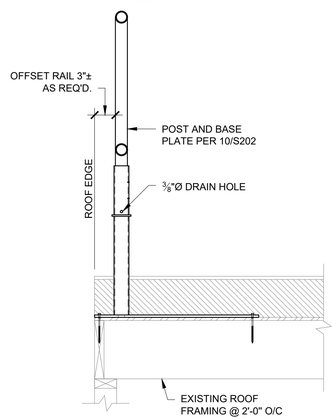


11 S202 GUARD RAIL
19347–22
SCALE: 1" = 1'-0"

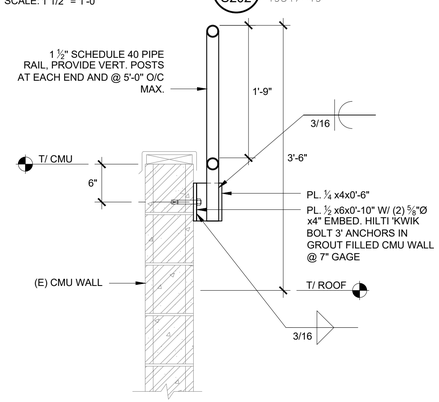


12 S202 GUARDRAIL SECTION
19347–23
SCALE: 1" = 1'-0"

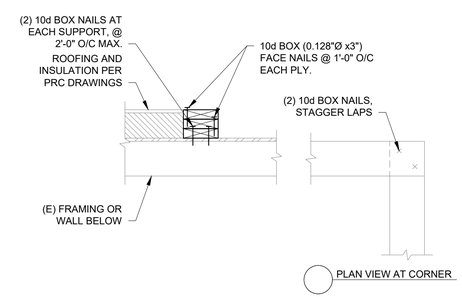


13 S202 TYP. BUILT-UP NAILER
19347–24
SCALE: 1" = 1'-0"

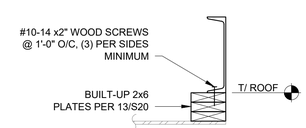


14 S202 ROOF HATCH
19347–25
SCALE: 1" = 1'-0"

BID SET


7650 SW Beveland, Suite 100
Tigard, Oregon 97223
Phone: (503) 443-3900
Fax: (503) 443-3780
TMR
T.M. RIPPEY
CONSULTING ENGINEERS


REGISTERED PROFESSIONAL ENGINEER
16,720
OREGON
JULY 20, 1993
RALPH TURNBAUGH
EXP: 6/30/20


PROFESSIONAL ROOF CONSULTANTS INC
1108 SE GRAND AVENUE, SUITE 300
PORTLAND, OREGON 97214
PH. 503 280 8759 FAX: 503 280 8866


# BEAVERTON SCHOOL DISTRICT
# BARNES ELEMENTARY SCHOOL
# ROOF REPLACEMENT

SHEET TITLE:
DETAILS


THESE DRAWINGS ARE THE PROPERTY OF PROFESSIONAL ROOF CONSULTANTS, INC. AND ARE NOT TO BE USED OR REPRODUCED WITHOUT WRITTEN PERMISSION OF PROFESSIONAL ROOF CONSULTANTS, INC.


THE BAR SCALE IS 2 INCHES IN LENGTH. IF THE BAR IS NOT 2 INCHES LONG, THIS DRAWING IS NOT TO THE SCALE INDICATED.

Date: FEB. 11, 2020
Revisions:

Drawn: JSC, CTT
Check: RNT
File:
TMR Job Number: 19347

SHEET NUMBER:
S202


© Copyright Professional Roof Consultants, Inc. 2019